RevNo	REVISION	Date	Signature	Checked

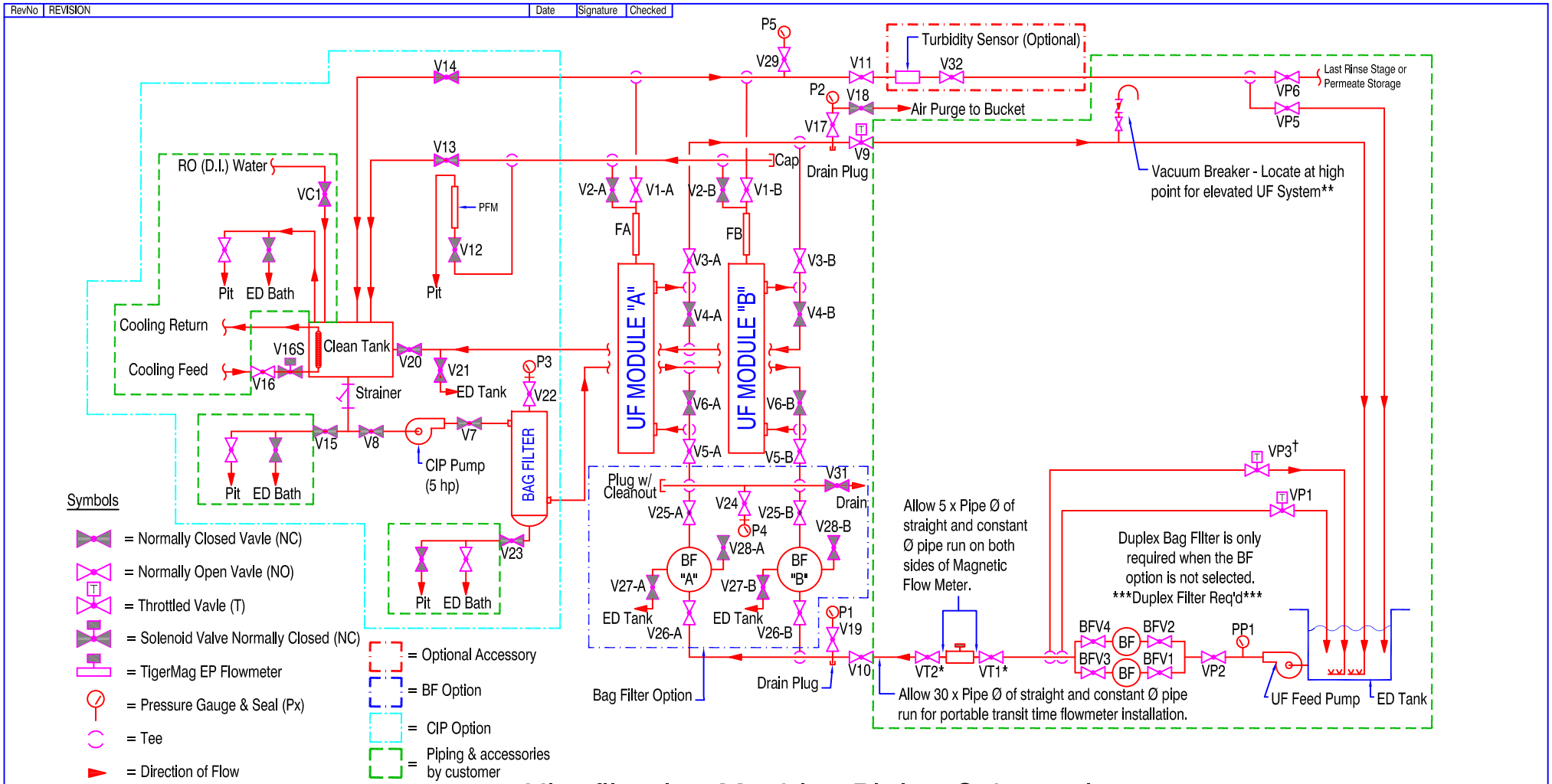

Symbols

- = Normally Closed Vavle (NC)
- = Normally Open Vavle (NO)
- = Throttled Vavle (T)
- = Solenoid Valve Normally Closed (NC)
- = TigerMag EP Flowmeter
- = Pressure Gauge & Seal (Px)
- = Tee
- = Direction of Flow

BF = Bag Filter
UF = Ultrafilter

- = Optional Accessory
- = BF Option
- = CIP Option
- = Piping & accessories by customer

* = Optional

**Siphon breakers are required whenever the UF System is installed at a point higher than the paint tank. Without a siphon breaker, paint draining back to the tank can (and has) caused delamination of the UF membrane through drawing the permeate back through the membrane. If pump is >20% the required flow for the UF Machine.

Ultrafiltration Machine Piping Schematic

(XXXXX) = Part Number

UFS CORPORATION Electrocoating Equipment	Tel: +219-464-2027 Fax: +219-464-8646	Designed By:	JD	UF,Flow,Single,Basic+BF+CIP
		Date:	1/10/05	
	Visit us on the Web at www.ufsc.com	Approved By:		UFS Part No. 997303
		Date:		

THIS MATERIAL IS THE CONFIDENTIAL PROPERTY OF UFS CORPORATION AND SHOULD NOT BE USED IN ANY WAY DETRIMENTAL TO THE CORPORATION'S INTEREST. MATERIAL SHOULD NOT BE COPIED OR REPRODUCED IN PART OR IN WHOLE, AND INFORMATION FROM IT SHALL NOT BE FURNISHED TO OTHERS WITHOUT WRITTEN PERMISSION. ALL RIGHTS OF DESIGN AND INVENTION ARE RESERVED BY UFS CORPORATION. MATERIAL TO BE RETURNED UPON REQUEST.

Sheet:	1/1
Revision:	0
Units:	mm
Scale:	None